Cambridge International AS & A Level

Cambridge International Examinations
Cambridge International Advanced Subsidiary and Advanced Level

CANDIDATE NAME

CENTRE NUMBER

CANDIDATE NUMBER

7650054384

PHYSICS **9702/32**

Paper 3 Advanced Practical Skills 2 **May/June 2017**

2 hours

Candidates answer on the Question Paper.

Additional Materials: As listed in the Confidential Instructions.

READ THESE INSTRUCTIONS FIRST

Write your Centre number, candidate number and name on all the work you hand in.
Write in dark blue or black pen.
You may use an HB pencil for any diagrams or graphs.
Do not use staples, paper clips, glue or correction fluid.
DO **NOT** WRITE IN ANY BARCODES.

Answer **both** questions.
You will be allowed to work with the apparatus for a maximum of one hour for each question.
You are expected to record all your observations as soon as these observations are made, and to plan the presentation of the records so that it is not necessary to make a fair copy of them.
You are reminded of the need for good English and clear presentation in your answers.

Electronic calculators may be used.
You may lose marks if you do not show your working or if you do not use appropriate units.

Additional answer paper and graph paper should be used only if it becomes necessary to do so.

At the end of the examination, fasten all your work securely together.
The number of marks is given in brackets [ ] at the end of each question or part question.

For Examiner's Use	
1	
2	
Total	

This document consists of **11** printed pages and **1** blank page.

© UCLES 2017

CAMBRIDGE International Examinations

You may not need to use all of the materials provided.

1 In this experiment, you will investigate an electrical circuit.

(a) (i) Assemble the circuit shown in Fig. 1.1.

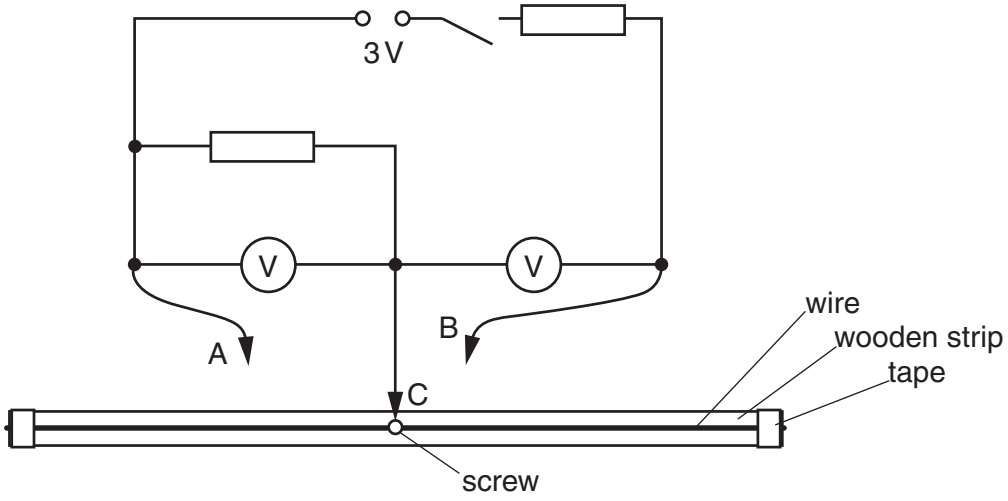

Fig. 1.1

The two resistors are identical.
A, B and C are crocodile clips. Connect C to the screw.

(ii) Connect A to the wire at a distance *p* of approximately 25 cm from the screw, as shown in Fig. 1.2.

(iii) Close the switch.

© UCLES 2017

(iv) Position B on the other side of the screw so that the two voltmeter readings have **the same value** *V*.

The distance between the screw and B is *q*, as shown in Fig. 1.2.

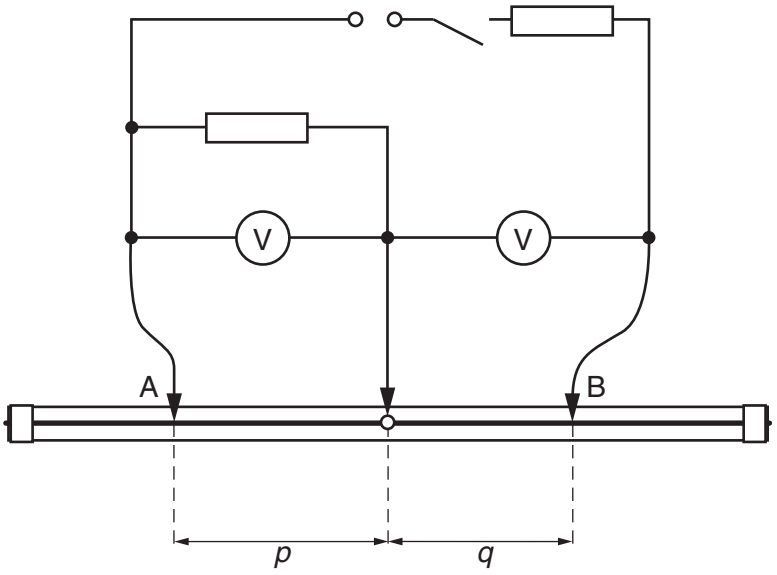

Fig. 1.2

(v) Measure and record the distances *p* and *q*. Record *V*.

p = ...

q = ...

V = ...

[2]

(vi) Open the switch.

(b) Change p and repeat **(a)(iii)**, **(a)(iv)**, **(a)(v)** and **(a)(vi)** until you have six sets of values of p, q and V.
Record your results in a table.
Include values of $\frac{1}{p}$ and $\frac{1}{q}$ in your table.

[10]

(c) **(i)** Plot a graph of $\frac{1}{q}$ on the y-axis against $\frac{1}{p}$ on the x-axis. [3]

(ii) Draw the straight line of best fit. [1]

(iii) Determine the gradient and y-intercept of this line.

gradient = ...

y-intercept = ...

[2]

© UCLES 2017

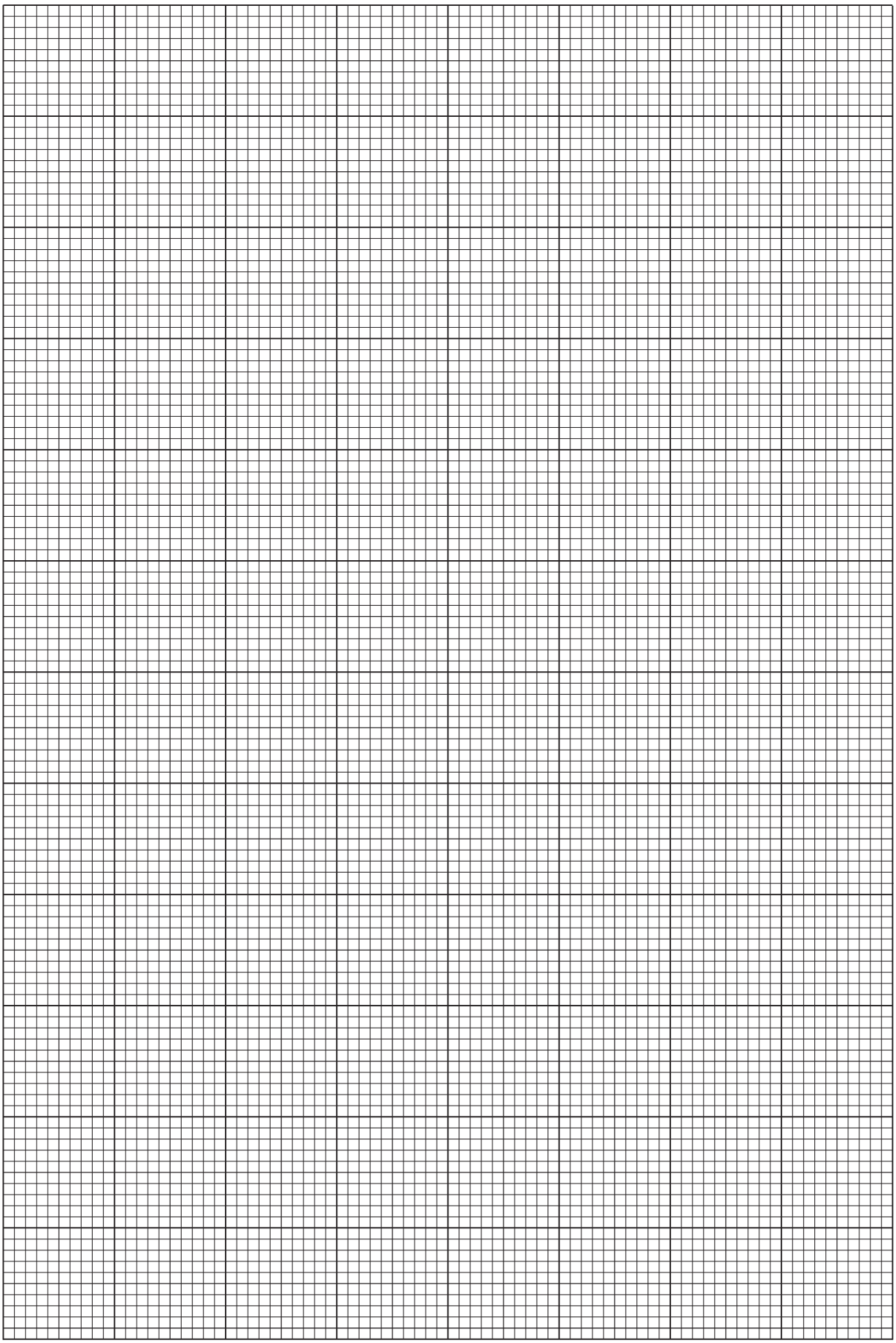

(d) It is suggested that the quantities q and p are related by the equation

$$\frac{1}{q} = \frac{a}{p} + b$$

where a and b are constants.

Use your answers in **(c)(iii)** to determine the values of a and b.
Give appropriate units.

a = ...

b = ...

[2]

[Total: 20]

BLANK PAGE

You may not need to use all of the materials provided.

2 In this experiment, you will investigate the rotational oscillation of a combination of springs.

(a) (i) You are provided with two joined springs and three joined springs. Using the **two** joined springs, set up the apparatus as shown in Fig. 2.1.

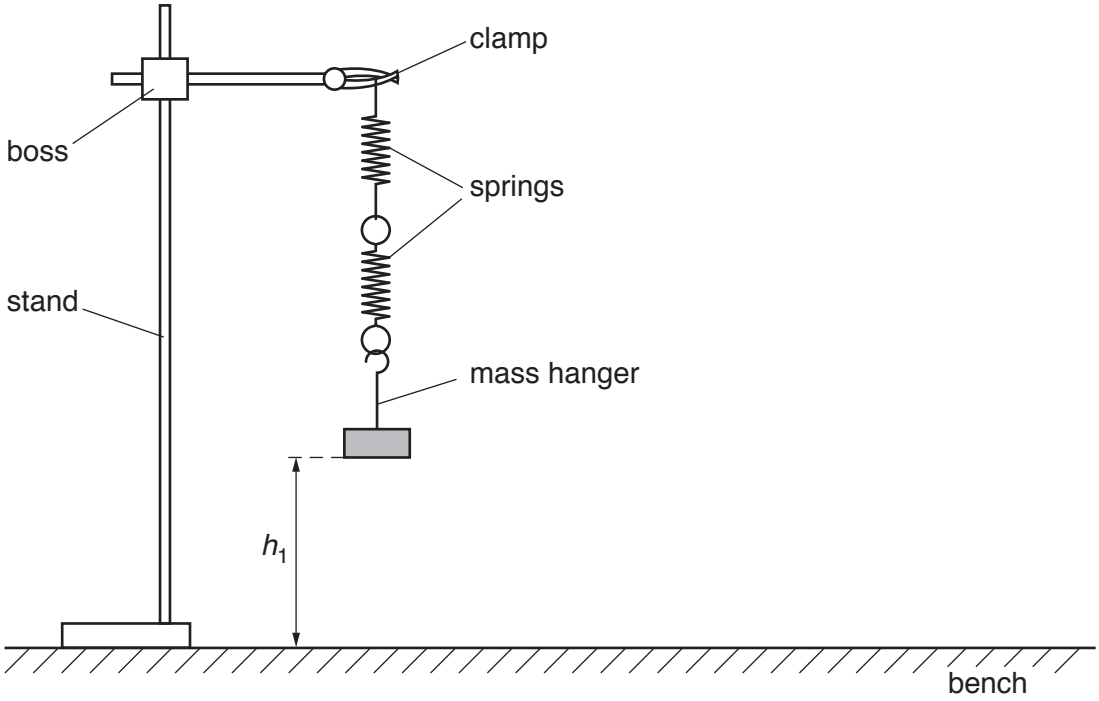

Fig. 2.1

(ii) Measure and record the height h_1 of the bottom of the mass hanger above the bench, as shown in Fig. 2.1.

h_1 = ... m [1]

(iii) Add the 100 g mass to the mass hanger. Measure and record the height h_2 of the bottom of the mass hanger above the bench.

h_2 = ... m [1]

(iv) Estimate the percentage uncertainty in your value of h_2.

percentage uncertainty = ... [1]

© UCLES 2017

(b) (i) Calculate the spring constant k for the combination, using the expression

$$k = \frac{mg}{(h_1 - h_2)}$$

where $m = 0.100\,\text{kg}$ and $g = 9.81\,\text{N kg}^{-1}$.

$k =$ ..... N m^{-1} [1]

(ii) Justify the number of significant figures you have given for your value of k.

.....

.....

.....[1]

(c) (i) Use **small** pieces of adhesive tape to reduce movement at the joints between components, as shown in Fig. 2.2.

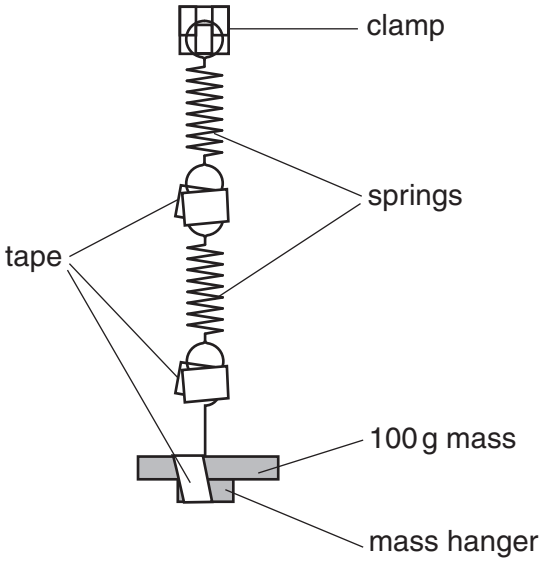

Fig. 2.2

(ii) Rotate the mass hanger and mass through one turn and release them. The masses make rotational oscillations, as shown in Fig. 2.3.

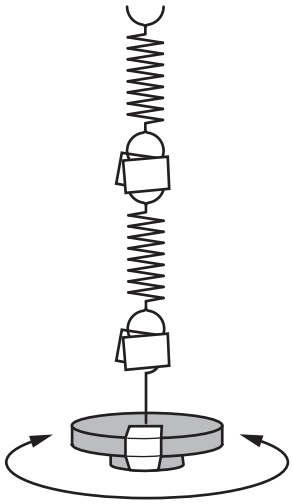

Fig. 2.3

(iii) Take measurements to find the period T of the rotational oscillations.

T = ... s [2]

(d) Repeat **(a)(ii)**, **(a)(iii)**, **(b)(i)** and **(c)** using the **three** joined springs.

h_1 = ... m

h_2 = ... m

k = ... $N\,m^{-1}$

T = ... s [3]

(e) It is suggested that the relationship between T and k is

$$T^3 = \frac{C}{k^2}$$

where C is a constant.

(i) Using your data, calculate two values of C.

first value of C = ...

second value of C = ...

[1]

(ii) Explain whether your results in **(e)(i)** support the suggested relationship.

.....

.....

.....

.....[1]

(f) **(i)** Describe four sources of uncertainty or limitations of the procedure for this experiment.

1. .....

.....

2. .....

.....

3. .....

.....

4. .....

.....

[4]

(ii) Describe four improvements that could be made to this experiment. You may suggest the use of other apparatus or different procedures.

1. .....

.....

2. .....

.....

3. .....

.....

4. .....

.....

[4]

[Total: 20]

Permission to reproduce items where third-party owned material protected by copyright is included has been sought and cleared where possible. Every reasonable effort has been made by the publisher (UCLES) to trace copyright holders, but if any items requiring clearance have unwittingly been included, the publisher will be pleased to make amends at the earliest possible opportunity.

To avoid the issue of disclosure of answer-related information to candidates, all copyright acknowledgements are reproduced online in the Cambridge International Examinations Copyright Acknowledgements Booklet. This is produced for each series of examinations and is freely available to download at www.cie.org.uk after the live examination series.

Cambridge International Examinations is part of the Cambridge Assessment Group. Cambridge Assessment is the brand name of University of Cambridge Local Examinations Syndicate (UCLES), which is itself a department of the University of Cambridge.